SAFEROAD®

Pfosten-Ramm-Plan
Post foundation

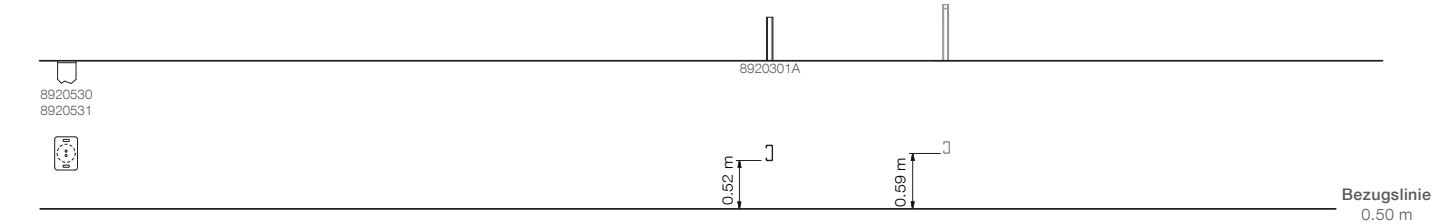

Systemübersicht
System overview

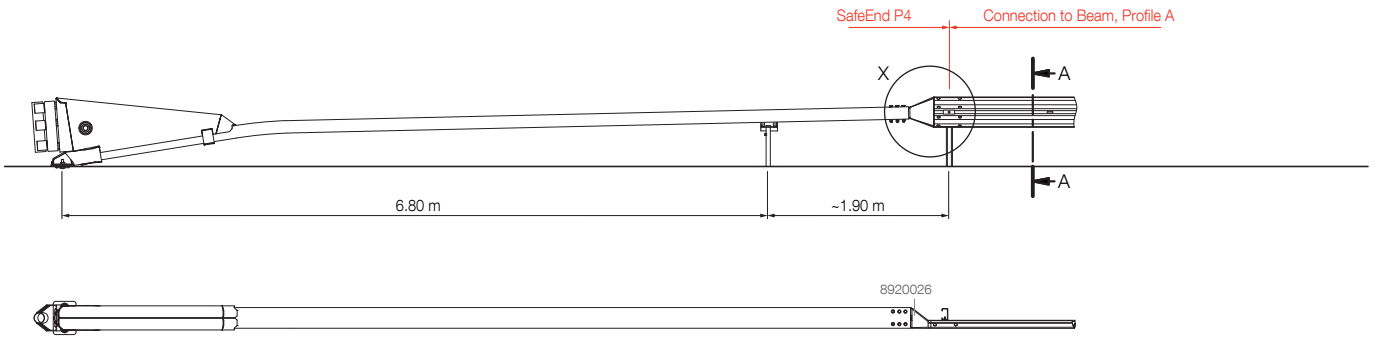

Schnittdarstellung
Sectional view

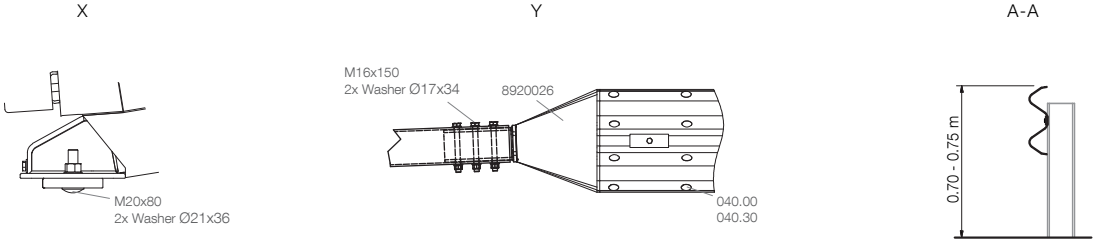

Parts

Art. no.	Description	Qty
040.00	Panhead bolt M16x27, 4.6	4
040.30	Washer Ø18	4
8920080	SafeEnd	1
	Bolt M16x150	12
	Washer Ø17x34	0.5
	Carriage bolt, M20x80	2
	Washer Ø21x36	10
8920301A	Post, C140x40, 1.300 mm	1
8920026	Connection, Beam (A) to SafeEnd	1
8920081	SafeEnd cap	1
8920082	SafeEnd side cap	2
8920530	Nail for asphalt, 1.500 mm	1
8920531	Nail for gravel, 2.000 mm	1

Position

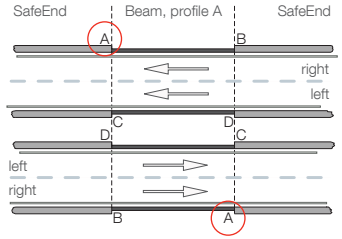

Systemübersicht · System overview · Présentation du système · Panoramica del sistema · Descripción general del sistema · Visão geral do sistema · Přehled systému Sisteme Genel Bakış · Przegląd systemu · Обзор системы · Prezentare generală sistem · Overzicht van het systeem · Systemtegning · Systemritning · نظرة عامة للنظام

SafeEnd

Connection to Beam, Profile A · Position A

© 11/2018 Vik Ørsta AS, Please note that forwarding this drawing without permission from Saferoad RSS GmbH is a break of copyright.